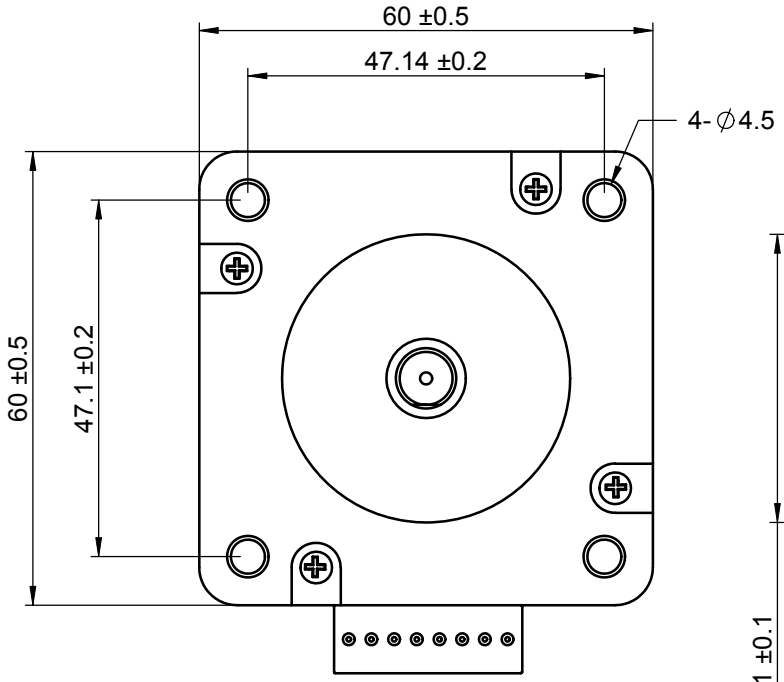

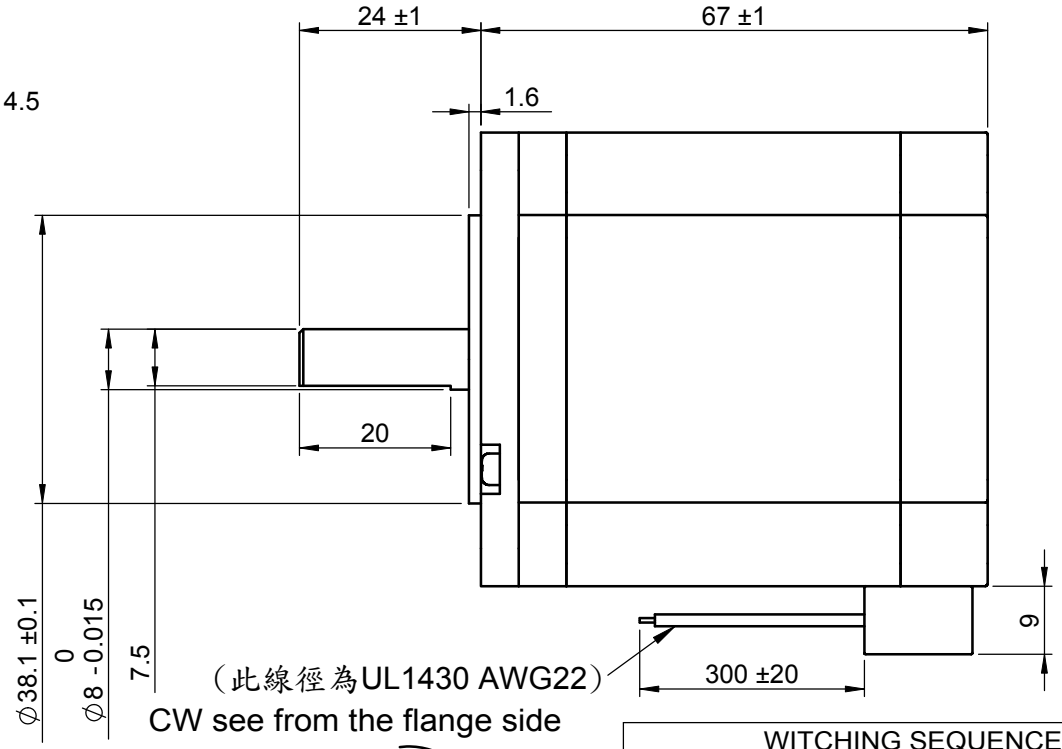

CW see from the flange side

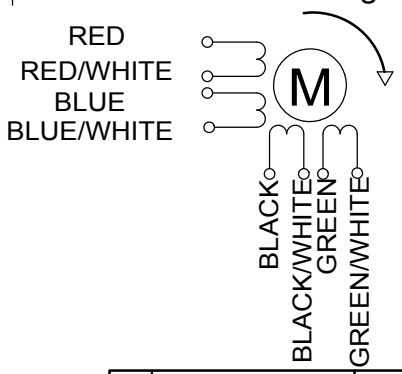

WITCHING SEQUENCE						
PIN LOCATION	COLOR	→ CW				
1	RED	+	-	-	+	+
	BLUE					
2	RED/WHITE	-	+	+	-	-
	BLUE/WHITE					
3	BLACK	+	+	-	-	+
	GREEN					
4	BLACK//WHITE	-	-	+	+	-
	GREEN//WHITE					

註：以雙極性驅動板測試

MODEL		Motor Characteristics					
JH60-G0R1A785		Resistance	Step Angle	Steps Revolution	Max PIT Rate	Max POT Rate	POT(at300pps)
Constant current	30V 3A	1.2Ω	1.8 °	200	400PPS	10100PPS	19.3kg-cm

THIRD ANGLE PROJECTION	製圖	JOANNE	Cheshire Electric Company,LLC	
ALL DIMENSION ARE IN MM (UNLESS OTHERWISE SPECIFIED)	設計		Part No JH60-G0R1A785	
	審核	Adam		
	材料		Name HB stepper motor	REV. NO. A
繪製比例: 1:1	完成時間	2012/3/13		